LED autolamps

NEW PRODUCT JULY 2016

High Brightness Marine Flood Lamp

Tolerant to Acidic and Alkaline Conditions

List Price
$55.90ea +gst

- High Powered 3 Watt LEDs
- Tough Polycarbonate Lens
- Sea Spray/Salt Water Resitant
- Stainless Steel Fittings
- IP67 100% Water Proof
- Marine Grade Coating

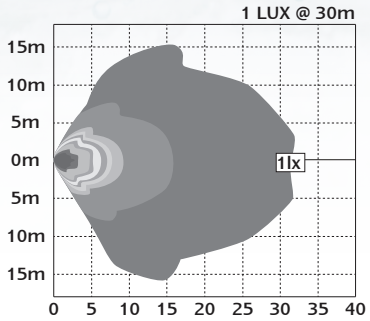

660 Total Lumen Output
489 Effective Lumen

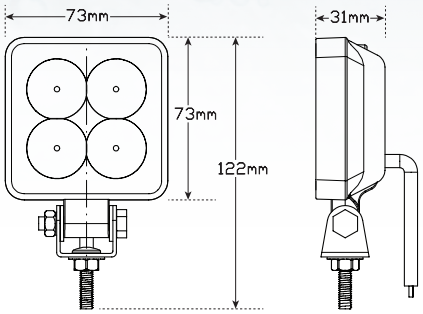

Specifications	
Part No	7312WM
Package	Blister
Barcode	9335962019489
Function	Flood/Reverse Lamp
LED Qty	4x3 Watt
Lumen	489lm
Voltage	9-30 Volt
Draw @13.8V	0.59A
@28V	0.28A
Warranty	5 Years
Cable	30cm
Lens	Polycarbonate
Base	Die Cast Alloy

All enquiries P: (03) 9466 7075, E: led@ledtech.com.au, www.ledautolamps.com

DISCLAIMER - LED Technologies Pty. Ltd. have made every effort to ensure that the information is correct and accurate at the time of printing. Print Date June 2016